Please check the examination details below before entering your candidate information

Candidate surname	Other names

Centre Number | Candidate Number

Pearson Edexcel
Level 1/Level 2 GCSE (9–1)

Friday 22 May 2020

Afternoon (Time: 1 hour 45 minutes) | Paper Reference **1DT0/1B**

Design and Technology

Component 1: Papers and Boards

You must have:
Calculator, ruler, HB pencil, protractor, compass

Total Marks

Instructions

- Use **black** ink or ball-point pen.
- **Fill in the boxes** at the top of this page with your name, centre number and candidate number.
- Answer **all** questions.
- Answer the questions in the spaces provided
  – *there may be more space than you need.*
- Calculators may be used.
- Any diagrams may NOT be accurately drawn, unless otherwise indicated.
- You must **show all your working out** with **your answer clearly identified** at the **end of your solution**.

Information

- The total mark for this paper is 100.
- The marks for **each** question are shown in brackets
  – *use this as a guide as to how much time to spend on each question.*

Advice

- Read each question carefully before you start to answer it.
- Try to answer every question.
- Check your answers if you have time at the end.

Turn over ▶

©2020 Pearson Education Ltd.
1/1/1/1/1/1/

P 6 2 0 0 5 A 0 1 2 8

Pearson

SECTION A – CORE

Answer ALL questions. Write your answers in the spaces provided.

1 (a) The materials that products are made from are chosen because of their properties.

Figure 1 shows a table of products.

For each of the products shown, give a property of the material it is made from that makes the material suitable for the product.

The first one has been done for you.

Picture of product	Material and product	Property
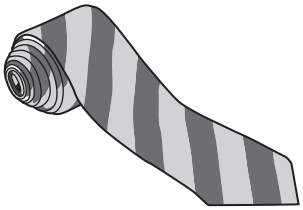	Polyester school tie	Crease resistant
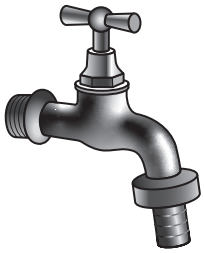	Brass garden tap	**(1)** (i) .....
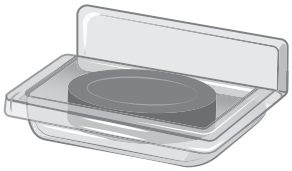	Acrylic soap tray	**(1)** (ii) .....
	Folding box board breakfast cereal box	**(1)** (iii) .....
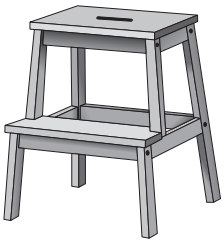	Beech kitchen steps	**(1)** (iv) .....

Figure 1

DO NOT WRITE IN THIS AREA
DO NOT WRITE IN THIS AREA
DO NOT WRITE IN THIS AREA

(b) The school tie is made from a piece of fabric measuring 135 cm long by 9 cm wide.

The fabric is supplied in a roll that is 90 mm wide and costs £3.55 per metre.

The fabric can be bought to the nearest cm.

Calculate the cost of fabric required to make one tie giving your answer in pounds (£) to 2 decimal places (dp).

(2)

Cost £ .....

(c) An advantage of using polyester for the school tie is that it is crease resistant.

Explain **one** other advantage of using polyester for the school tie.

(2)

.....

.....

.....

.....

(Total for Question 1 = 8 marks)

DO NOT WRITE IN THIS AREA
DO NOT WRITE IN THIS AREA
DO NOT WRITE IN THIS AREA

2 Figure 2 shows a bending jig that is used to make three separate, different-sized wire flowers for some jewellery.

The flowers are formed by wrapping copper wire around the different-sized circles.

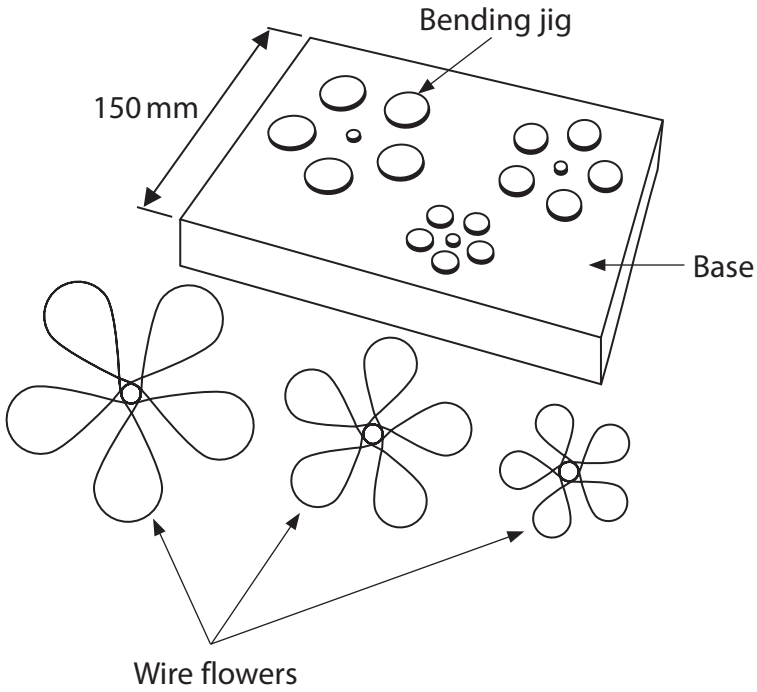

Figure 2

(a) Name **one** manufactured timber that could be used to make the base of the bending jig.

(1)

.....

(b) Prototype wire flowers were made using shape memory alloys (SMAs) to test the design before producing the final product from copper wire.

Explain **one** reason for using SMAs to make the prototype wire flowers.

(2)

.....

.....

.....

.....

DO NOT WRITE IN THIS AREA
DO NOT WRITE IN THIS AREA
DO NOT WRITE IN THIS AREA

Figure 3 shows two of the circles used on the bending jig.

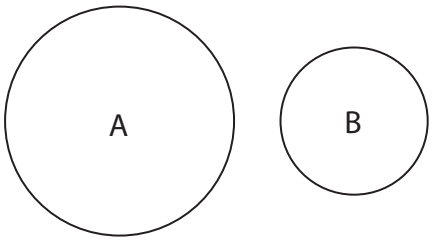

Figure 3

Diagram not to scale

The two circles have different diameters in the ratio of 5:3.

(c) (i) Calculate the radius of circle B if circle A has a radius of 35 mm.

(2)

Radius of circle B ..... mm

(ii) Calculate the area of circle A giving your answer to the nearest cm^2.

(2)

Use $\pi = 3.142$

Area of circle A ..... cm^2

DO NOT WRITE IN THIS AREA
DO NOT WRITE IN THIS AREA
DO NOT WRITE IN THIS AREA

(d) Explain **one** reason why copper wire was used to make the flowers.

(2)

.....

.....

.....

.....

(Total for Question 2 = 9 marks)

DO NOT WRITE IN THIS AREA
DO NOT WRITE IN THIS AREA
DO NOT WRITE IN THIS AREA

3 Figure 4 shows a games controller.

The case is made from high impact polystyrene (HIPS).

Figure 4

(a) Other than impact resistance, give **one** property of HIPS that makes it an appropriate material from which to make the case.

(1)

.....

(b) The games controller is only sold online and is sent through the post in a corrugated board package.

Explain **one** reason for using corrugated board to make the package.

(2)

.....

.....

.....

.....

DO NOT WRITE IN THIS AREA
DO NOT WRITE IN THIS AREA
DO NOT WRITE IN THIS AREA

(c) The manufacturer is developing a new games controller that uses robotic materials.

Explain **one** way that robotic materials can be used in the new games controller.

(2)

.....

.....

.....

.....

(d) The original games controller cost £12.50 and the new games controller costs £19.00.

Calculate the percentage increase in the cost of the new games controller.

(2)

Percentage increase ..... %

(e) Explain **two** environmental issues related to the development and release of the new games controller.

(4)

1 .....

.....

.....

.....

2 .....

.....

.....

.....

(Total for Question 3 = 11 marks)

DO NOT WRITE IN THIS AREA
DO NOT WRITE IN THIS AREA
DO NOT WRITE IN THIS AREA

DO NOT WRITE IN THIS AREA
DO NOT WRITE IN THIS AREA
DO NOT WRITE IN THIS AREA

4 Figure 5 shows a picture of a firefighter.

(Source: © John Kasawa/Shutterstock)

Figure 5

The firefighter's uniform has electronic sensors built into it to detect heat.

(a) Name an electronic sensor that is used to sense heat.

(1)

.....

(b) The firefighter's uniform is made from protective textiles.

Explain **one** disadvantage for the firefighter of wearing a uniform made from protective textiles.

(2)

.....

.....

.....

.....

(c) The firefighter's uniform contains an electronic system which is powered by a small 9V battery.

(i) Draw the circuit symbol for a battery in the space below.

(1)

Figure 6 shows some information about the battery and the consumption rate for the electronic system used in the firefighter's uniform.

Analyse the information.

Battery capacity (mAh)	1000
Load current (mA)	350
Consumption rate	0.7

Figure 6

(ii) Calculate the battery life for the electronic system used by the firefighter's uniform.

Use the formula below to calculate the answer.

Give your answer in minutes.

(2)

$$\text{Load current (mA)} = \frac{\text{Battery capacity (mAh)} \times \text{Consumption rate}}{\text{Battery life (hours)}}$$

Battery life ..... minutes

DO NOT WRITE IN THIS AREA
DO NOT WRITE IN THIS AREA
DO NOT WRITE IN THIS AREA

(d) Discuss the use of video conference meetings by companies around the world to develop new technologies for firefighters.

(6)

(Total for Question 4 = 12 marks)

TOTAL FOR SECTION A = 40 MARKS

DO NOT WRITE IN THIS AREA
DO NOT WRITE IN THIS AREA
DO NOT WRITE IN THIS AREA

SECTION B – PAPERS AND BOARDS

Answer ALL questions. Write your answers in the spaces provided.

5 Figure 7 shows a design solution for a label holder together with some additional information.

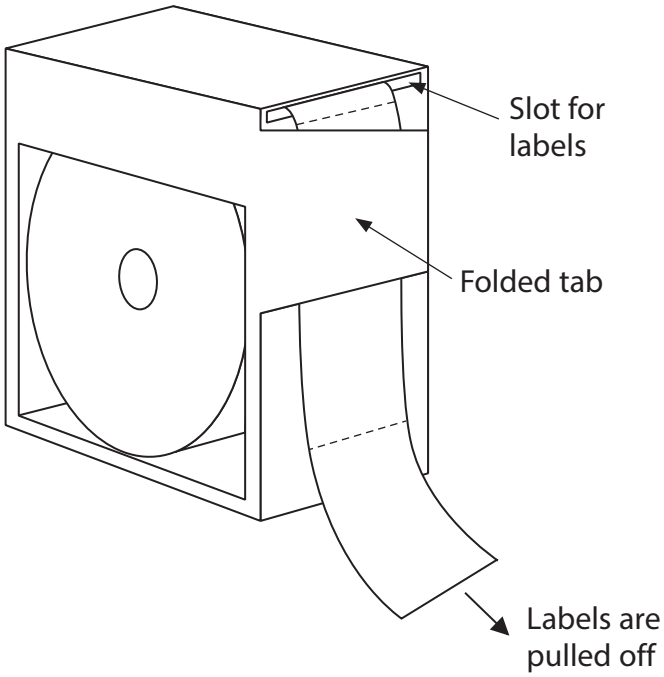

Additional information

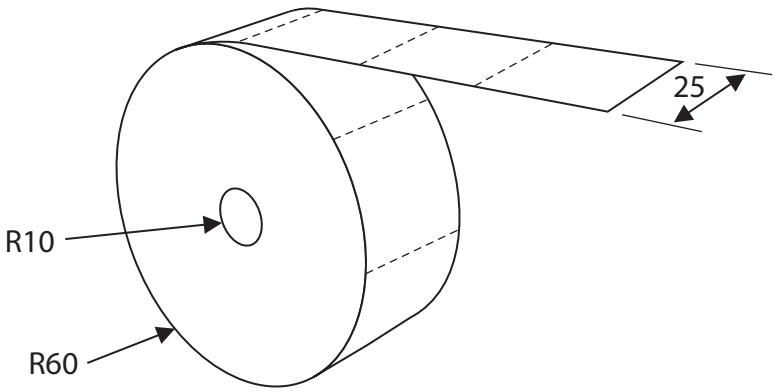

Figure 7

All dimensions in mm

DO NOT WRITE IN THIS AREA
DO NOT WRITE IN THIS AREA
DO NOT WRITE IN THIS AREA

(a) The label holder needs to be improved to include the following specification points.

The label holder must:

- allow an empty roll of labels to be easily replaced and held in place without falling out
- be held securely on a desk and not move when labels are pulled off
- provide easily accessible storage space for a spare roll of labels.

Use notes and sketches to show how the label holder could be modified to include these three specification points.

You will be marked on how you apply your understanding of design and technology, not your graphical skills.

Use the outline of the original design solution to show your modifications.

(6)

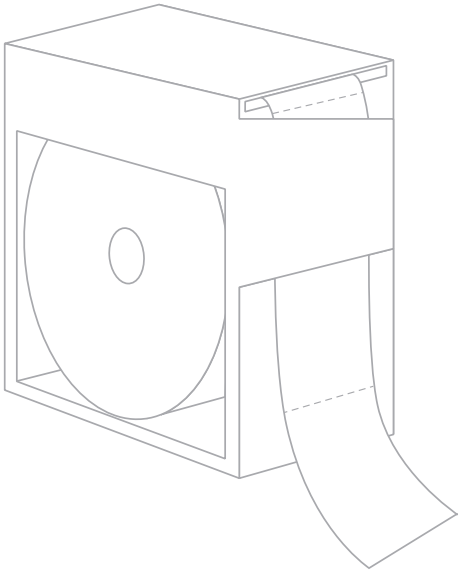

DO NOT WRITE IN THIS AREA
DO NOT WRITE IN THIS AREA
DO NOT WRITE IN THIS AREA

(b) Figure 8 shows some examples of laser cut shop signs that are used by retailers to show customers where different products are on sale in the shop.

They are manufactured from 2 mm thick solid white board and are 300 mm long.

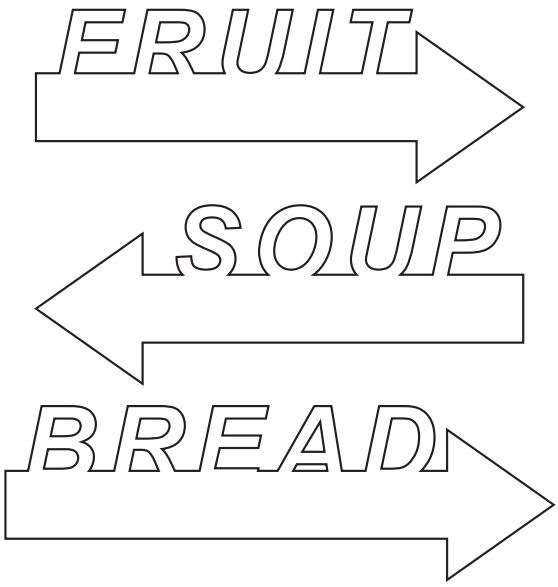

Figure 8

Explain **two** ways that the shop signs meet or fail to meet the criteria of providing a method to show where specific products are on sale in the shop.

(4)

1 .....

.....

.....

.....

2 .....

.....

.....

.....

(Total for Question 5 = 10 marks)

DO NOT WRITE IN THIS AREA
DO NOT WRITE IN THIS AREA
DO NOT WRITE IN THIS AREA

6 Figure 9 shows a sketchbook and the common A sizes for paper.

The pages of the sketchbook are made from cartridge paper.

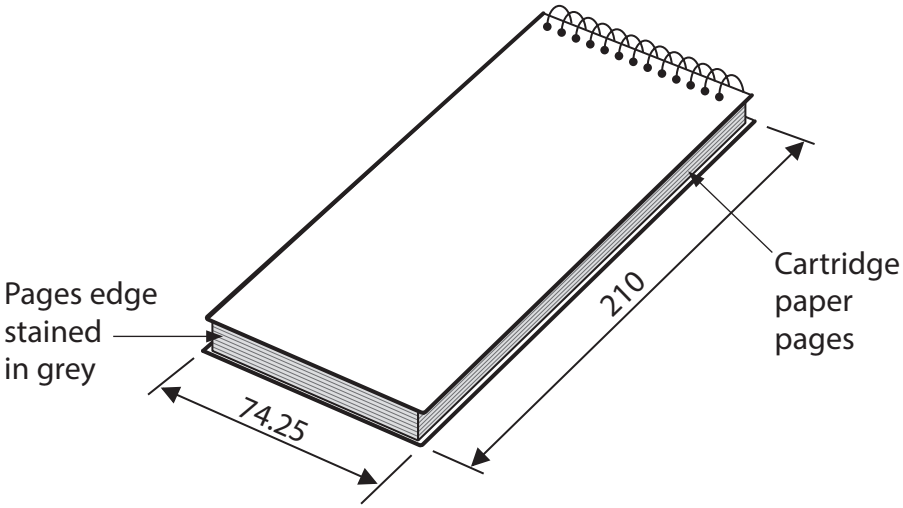

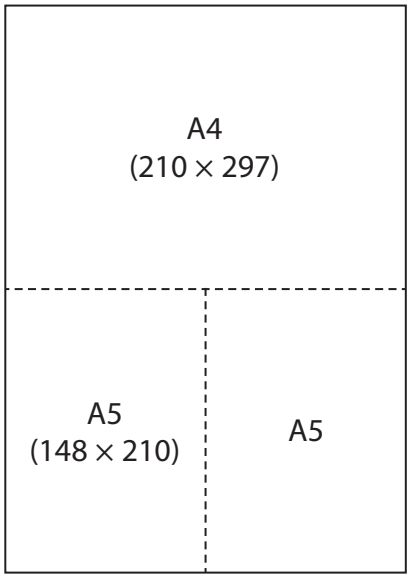

All dimensions in mm

Figure 9

(a) Explain **two** availability factors that could affect the supply of cartridge paper for the pages of the sketchbook.

(4)

1 .....

.....

.....

.....

2 .....

.....

.....

.....

DO NOT WRITE IN THIS AREA
DO NOT WRITE IN THIS AREA
DO NOT WRITE IN THIS AREA

(b) The pages of the book have been edge stained.

Use notes and sketches to show how the pages of the book should be prepared and edge stained.

You will be marked on how you apply your understanding of design and technology, not your graphical skills.

(4)

DO NOT WRITE IN THIS AREA
DO NOT WRITE IN THIS AREA
DO NOT WRITE IN THIS AREA

(c) Paper for the pages of the sketchbook is supplied to the manufacturer as stock A4 size as shown in Figure 10.

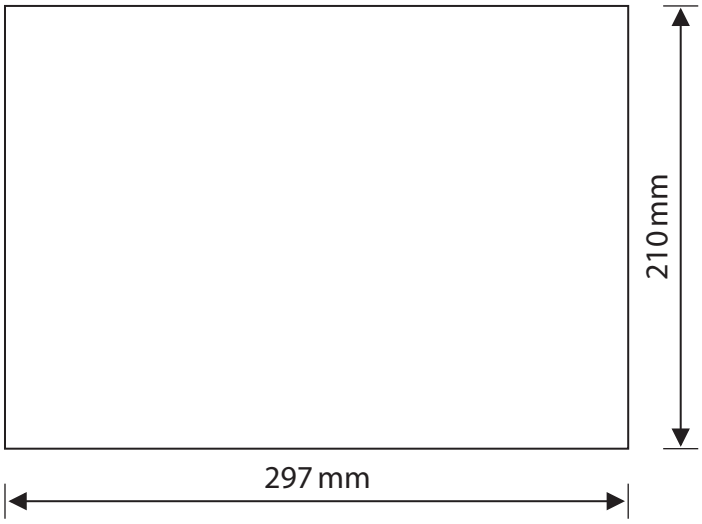

Figure 10

Explain **one** reason why the manufacturer would buy cartridge paper in A4-sized sheets to make the pages of the sketchbook.

(2)

.....

.....

.....

.....

DO NOT WRITE IN THIS AREA
DO NOT WRITE IN THIS AREA
DO NOT WRITE IN THIS AREA

(d) Give **two** different properties of cartridge paper that make it an appropriate choice of material for the pages of the sketchbook.

For each property, explain **one** advantage of using cartridge paper for the pages of the sketchbook.

(6)

Property 1

.....

Explanation

.....

.....

.....

.....

Property 2

.....

Explanation

.....

.....

.....

.....

(Total for Question 6 = 16 marks)

DO NOT WRITE IN THIS AREA
DO NOT WRITE IN THIS AREA
DO NOT WRITE IN THIS AREA

DO NOT WRITE IN THIS AREA
DO NOT WRITE IN THIS AREA
DO NOT WRITE IN THIS AREA

7 Figure 11 shows a cat shelter made from corrugated cardboard which has been marked out by hand using marking-out tools.

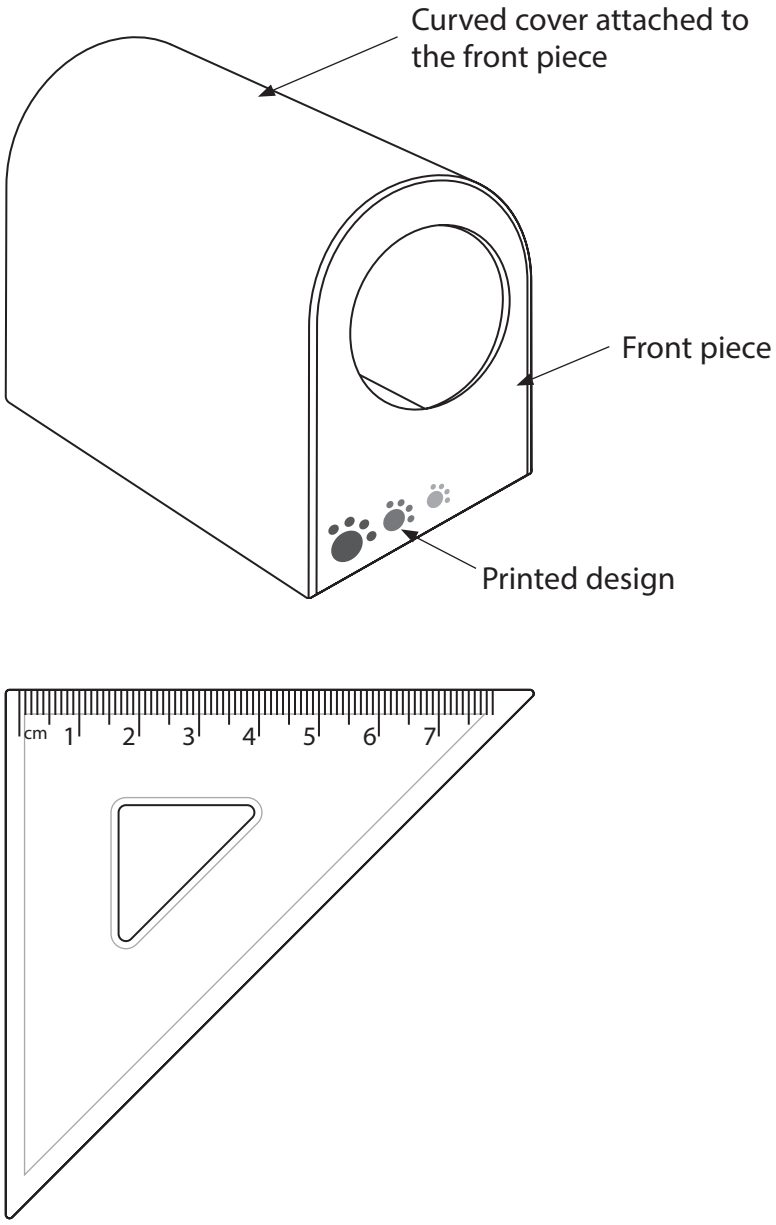

Figure 11

(a) Name the marking-out tool shown in Figure 11.

(1)

.....

Figure 12 shows a template that is used when marking out the front piece of the cat shelter.

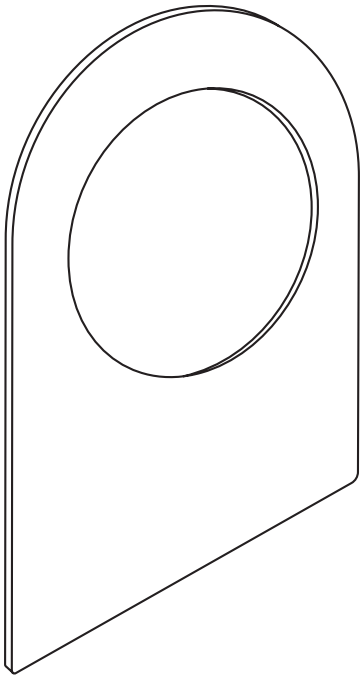

Figure 12

(b) Explain **two** advantages of using a template to mark out the front piece of the cat shelter when manufacturing in large quantities.

(4)

1 .....

.....

.....

.....

2 .....

.....

.....

.....

DO NOT WRITE IN THIS AREA
DO NOT WRITE IN THIS AREA
DO NOT WRITE IN THIS AREA

Figure 13 shows the dimensions for the curved cover, Part A, that will form the cat shelter.

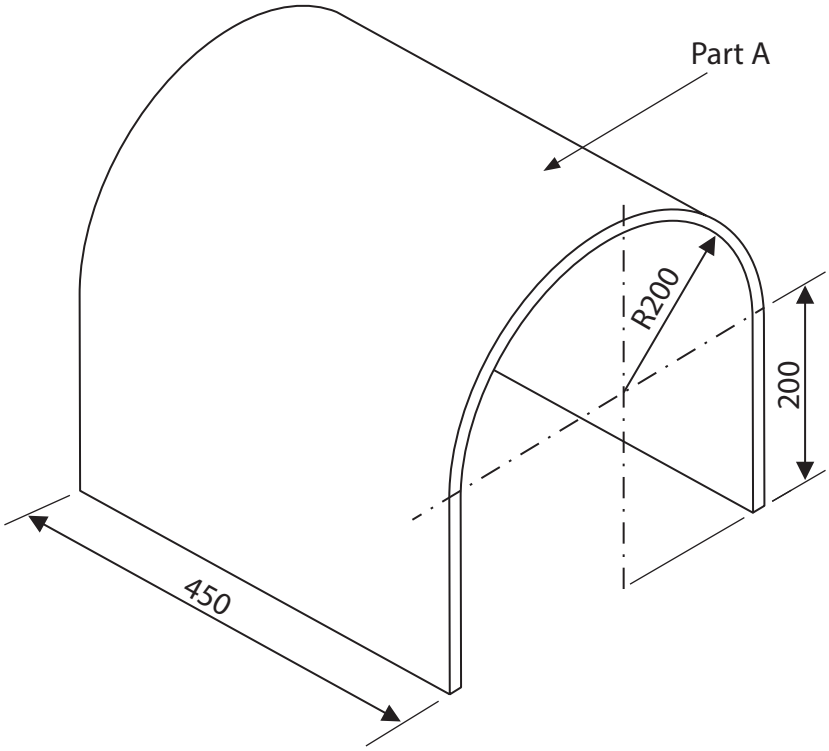

All dimensions in mm

Figure 13

Use $\pi = 3.142$

Curved surface area of an open cylinder = $2\pi rh$

(c) Calculate the whole internal surface area of Part A, the curved cover, as shown.

Give your answer to the nearest whole cm^2.

(5)

Answer..... cm^2

DO NOT WRITE IN THIS AREA
DO NOT WRITE IN THIS AREA
DO NOT WRITE IN THIS AREA

Figure 14 shows the design that is screen printed onto the front piece of the cat shelter.

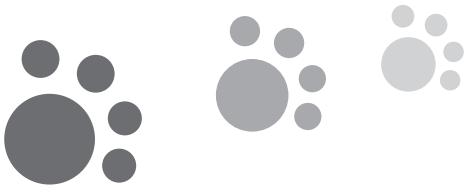

Figure 14

(d) Explain **two** reasons for using screen printing to print on the front piece.

(6)

1 .....

.....

.....

.....

.....

.....

2 .....

.....

.....

.....

.....

.....

(Total for Question 7 = 16 marks)

DO NOT WRITE IN THIS AREA
DO NOT WRITE IN THIS AREA
DO NOT WRITE IN THIS AREA

DO NOT WRITE IN THIS AREA
DO NOT WRITE IN THIS AREA
DO NOT WRITE IN THIS AREA

BLANK PAGE

QUESTION 8 BEGINS ON THE NEXT PAGE

8 Figure 15 shows a greetings card and some of its parts.

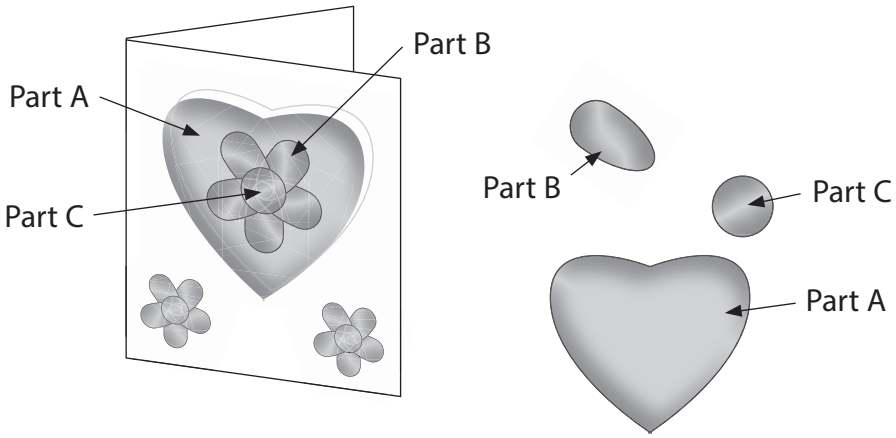

Figure 15

(a) Explain **one** reason for finishing different parts of the greetings card with different colours of foil block.

(2)

.....

.....

.....

.....

(b) All the parts of the greetings card have been manufactured from the same stock form of card.

Explain **one** reason for using the same stock form of card to make all the parts of the greetings card.

(3)

.....

.....

.....

.....

.....

.....

DO NOT WRITE IN THIS AREA
DO NOT WRITE IN THIS AREA
DO NOT WRITE IN THIS AREA

(c) Card is produced from wood pulp.

Explain **two** ways that genetic engineering can be used to modify trees grown for wood pulp.

(4)

1 .....

.....

.....

.....

2 .....

.....

.....

.....

DO NOT WRITE IN THIS AREA
DO NOT WRITE IN THIS AREA
DO NOT WRITE IN THIS AREA

(d) The greetings cards are manufactured in the UK and transported throughout Europe.

Figure 16 shows information about the greetings cards.

Scale of production	Batch
Potential market	Europe
Life span	10+ years
Intended market	Adults
Surface finish	Coloured hot foil blocking

Figure 16

Analyse the information in Figure 16.

Evaluate the greetings cards with reference to cultural and ethical factors including:

- suitability for intended market
- the consumer society
- built-in product obsolescence.

(9)

DO NOT WRITE IN THIS AREA
DO NOT WRITE IN THIS AREA
DO NOT WRITE IN THIS AREA

DO NOT WRITE IN THIS AREA
DO NOT WRITE IN THIS AREA
DO NOT WRITE IN THIS AREA

(Total for Question 8 = 18 marks)

TOTAL FOR SECTION B = 60 MARKS
TOTAL FOR PAPER = 100 MARKS

BLANK PAGE

DO NOT WRITE IN THIS AREA
DO NOT WRITE IN THIS AREA
DO NOT WRITE IN THIS AREA